Computer Aided Engineering Graphics

A.Y:2025-2026

I-B.Tech II-Sem Question Bank

Branch: CSM/ECE/CSE(IoT, CS &BT),R&AI

Module-I

Short Questions

1. Define CAD.

   Solution:

   The process of constructing the drawings on the computer screen with the help of specially developed software and hardware is called Computer-Aided Drafting

2. List out the methods in Dimensioning

   Solution:

   a. Aligned method : In this method, the dimension is placed perpendicular to the dimension line.
   b. Unidirectional method : The dimension lines are broken near the middle for inserting the dimensions

3. Draw a Hexagon with a given side 25 mm

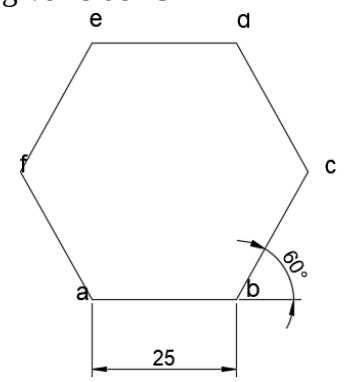

4. List various draw commands used in AUTO CAD

   Solution:

   - Move – Shifts objects from one place to another.
   - Copy – Duplicates selected objects.
   - Rotate – Rotates objects at a specified angle.
   - Mirror – Creates a mirrored copy.

   - Rectangle (REC) – Creates a rectangle by specifying two opposite corners.
   - Polygon (POL) – Creates equilateral polygons (triangle, pentagon, hexagon, etc.).
   - Ellipse (EL**)** – Draws an ellipse or elliptical arc using axis definitions.
   - Polyline (PL) – Creates a continuous line composed of segments (lines & arcs).

5. List out the types of lines used in Engineering Drawing

Solution:

i) Continuous thick or Continuous wide

ii) Continuous thin (narrow)

iii) Dashed thick (wide)

iv) Dashed thin (narrow)

6. What are the various modify commands used in AUTO CAD

Solution:

ERASE (E) – Deletes selected objects.
COPY (CO) – Copies objects to a specified location.
MOVE (M) – Moves objects from one location to another.
ROTATE (RO) – Rotates objects around a base point.
MIRROR (MI) – Creates a mirrored copy of objects about a specified axis.
STRETCH (S) – Stretches or lengthens selected objects.
TRIM (TR) – Trims objects to meet the edges of other objects.
FILLET (F) – Rounds or fillets the edges between two objects.
CHAMFER (CHA) – Bevels the corner between two objects.

Long Questions

1. Explain the significance of engineering drawing in the field of engineering.

Solution:

1. **Accuracy**

Definition: Drawings must precisely represent the shape, size, and details of the object.
Significance: Ensures components are manufactured correctly.

2. **Legibility**

Definition: Drawings should be clear and easy to read.
Significance: Minimizes misinterpretation by machinists and engineers.

3. **Clarity and Simplicity**

Definition: Use of simple language, standard symbols, and neat layout.
Significance: Facilitates better understanding even for non-technical users.

4. **Standardization**

Definition: Adhering to recognized standards like BIS or ISO.
Significance: Enables consistency and universal understanding.

5. **Scale**

Definition: Drawings are made proportional using a defined ratio.
Significance: Helps represent large or tiny components on paper.

6. **Projection Methods**

Definition: Techniques like orthographic or isometric projections.
Significance: Provides multiple views to fully describe an object.

7. **Dimensioning**

Definition: Indicating size and location of features.
Significance: Essential for manufacturing and inspection.

8. **Line Types and Symbols**

Definition: Usage of visible, hidden, center lines, and standard symbols.
Significance: Differentiates object features clearly.

2. What are the advantages of CAD over manual drafting?

Solution:
CAD (Computer-Aided Design) offers many advantages over traditional manual drafting methods. It improves speed, accuracy, efficiency, and flexibility in the design process.

1. **High Accuracy**: CAD ensures precise measurements and eliminates human error in drawing.
2. **Time Saving**: Drawings can be created and modified quickly compared to manual drafting.
3. **Easy Editing**: Any changes can be made easily using commands like Move, Trim, and Copy without redrawing.
4. **Reusability of Drawing**s: Existing drawings can be reused for new projects, saving time and effort.
5. **Better Visualization**: CAD allows 2D and 3D modeling for realistic visualization of objects.
6. **Improved Drawing Quality**: Drawings are neat, standardized, and consistent in appearance.
7. **Easy Storage and Retrieval**: Digital files can be stored, shared, and retrieved easily without physical space.
8. **Layer Management**: Layers help organize different parts of a drawing (dimensions, outlines, etc.) efficiently.
9. **Easy Communication**: CAD files can be shared electronically for team collaboration and review.
10. **Integration with Other Software**: CAD integrates with CAM and CAE for analysis, simulation, and manufacturing.

3. Explain types of dimensions in engineering drawing along with examples

Solution:
Dimensions are used in engineering drawings to specify the size, shape, and location of an object or feature.
They are mainly classified into the follow

1. **Linear Dimensions:**
   - Indicate the length, width, or height of an object.
   - Shown by dimension lines with arrowheads and numerical values.
     Example: Length of a line = 50 mm

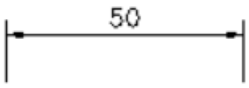

Linear

2. **Angular Dimensions:**

- Specify the angle between two lines or surfaces.
- Represented by an arc with the angle value.
  Example: Angle between two inclined lines:54^0

Angular

3. **Radial Dimensions:**

- Used to show the radius of arcs, circles, or fillets.
- The dimension line is drawn from the center to the arc.
  Example**:** Radius of a circle R = 36 mm.

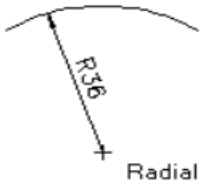

Radial

4. **Diameter:**

- Used to specify the diameter of circles or cylindrical objects.
- Indicated by a symbol "⌀".
  Example: ⌀40 mm hole or shaft.

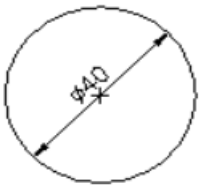

Diameter

5. **Baseline Dimensioning (Parallel Dimensioning):**

- In this method, all dimensions are measured from a common reference line **(**baseline)**.**

  - The baseline may be an edge, center line, or datum.
  - It ensures accuracy because all measurements originate from the same point, reducing cumulative errors.

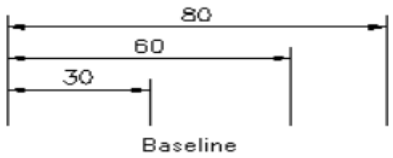

6. Continuous Dimensioning (Chain Dimensioning):

- In this method, dimensions are given one after another in a chain from point to point.
- Each dimension starts where the previous one ends.
- Simple to draw but errors may accumulate along the chain.

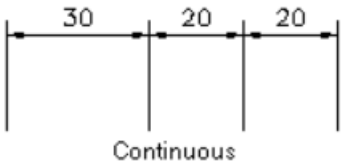

4. Explain the basic steps to set up the AutoCAD workspace for a 2D drawing

Solution: To set up AutoCAD for 2D drawing, follow these basic steps:

1. **Open AutoCAD:** Launch AutoCAD and select a 2D Drafting & Annotation **workspace**.
2. **Set Units:** Use the UNITS command to choose the **drawing units** (mm, cm, inches, etc.) and precision.
3. **Set Limits and Grid:**
    - Define the drawing limits using the LIMITS command (e.g., 0,0 to 297,210).
    - Turn on the **grid** for guidance (GRID command) and snap to grid (SNAP command) for accuracy.
4. **Set Drawing Scale:** Determine the scale for the drawing to ensure all objects fit properly on the layout.
5. **Layers Setup:**

    - Create and organize layers for different components (e.g., dimensions, outlines, centerlines) using the LAYER command.
    - Assign different colors, line types, and line weights to layers for clarity.

6. **Snap and Ortho Settings:**

    - Enable Ortho mode (F8**)** for horizontal and vertical lines.
    - Use Object Snap (OSNAP, F3) to accurately pick points on objects.

7. **Save Template (Optional):** Save the workspace as a template file for future 2D drawings to maintain consistency.

5. Explain the methods of dimensions in engineering drawing along with examples

Solution:

Dimensioning is the process of indicating the size, location, and other details of an object on a drawing.

There are mainly two methods of dimensioning used in engineering drawing**:**

1. Aligned Method:

In this method, the dimension figures are placed parallel to the dimension lines**.**

- They are read from the bottom or right-hand side of the drawing sheet.
- The dimension line is drawn parallel to the feature being dimensioned.
- Commonly used in architectural and machine drawings**.**

Example:

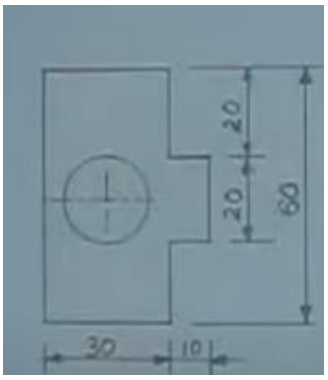

2. Unidirectional Method

- In this method, all dimension figures are written horizontally for easy reading from the bottom of the sheet.
- Dimension lines may be horizontal, vertical, or inclined, but the figures remain horizontal.
- This method provides a neat and uniform appearance.
- Commonly used in engineering and mechanical drawings.

Example:

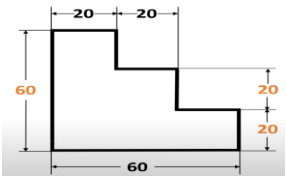

6. Compare the manual drawing with AutoCAD

Feature	Manual Drawing	AutoCAD
Accuracy	Less accurate; prone to human error	Highly accurate; precise dimensions and angles
Time	Time-consuming	Fast and efficient
Editing/Modification	Difficult; requires erasing and redrawing	Easy; objects can be moved, copied, or modified quickly
Storage	Requires physical space; hard to store and manage	Digital storage; easy to save, retrieve, and share
Reusability	Low; drawings cannot be reused easily	High; drawings can be reused for future projects
Visualization	2D only; hard to visualize complex shapes	2D and 3D modeling possible
Drawing Quality	Dependent on drafter's skill; may vary	Neat, standardized, and consistent
Collaboration	Difficult to share and work simultaneously	Easy to share and collaborate electronically
Integration with Other Tools	Not possible	Can integrate with CAM, CAE, and other software
Cost	Low initial cost; needs drawing tools and paper	Higher initial cost; requires software and computer

Module-II
Short Questions

1. Define eccentricity and write the e value for ellipse, parabola and hyperbola

   Solution:

   Eccentricity is defined as the ratio between its distance from a fixed-point F (focus) to its distance from a fixed line DD` (directrix) is constant, e = PF / PM.

   If e < 1, the conic section is called an ellipse

   If e = 1, the conic section is called a parabola

   If e > 1, the conic section is called a hyperbola

2. Define an Involute?

   Solution:

   An Involute is a curve traced by the free end of a thread unwound from a circle or a polygon in such a way that the thread is always tight and tangential to the circle or side of the polygon.

3. Which method is used to construct a Parabola in the general method?

   Solution :

   The method used to construct a parabola in the general method is Eccentricity method where eccentricity and focus distances are given

4. List various applications of an involute curve

Solution:

i) Payton's water meter

ii) teeth profile of a gear.

5. What is a Conic Section and list out the curves obtained?

Solution:

Conic sections are curves obtained when a cone is cut by a plane.

The nature of curve depends on angle of the cutting plane.

Four basic curves are Circle, Ellipse, Parabola, Hyperbola.

6. Define a conic section?

Solution:

The conic section is the locus of a point P moving in a plane such that the ratio of its distance from a fixed-point F (focus) to a fixed line DD` (directrix) is alays constant

Long Questions

1. Draw an ellipse with the distance of the focus from the directrix is 50 mm and Eccentricity=2/3 Also draw a tangent and a normal to the ellipse at a point 65 mm from the directrix. (Eccentricity method)

   Solution:

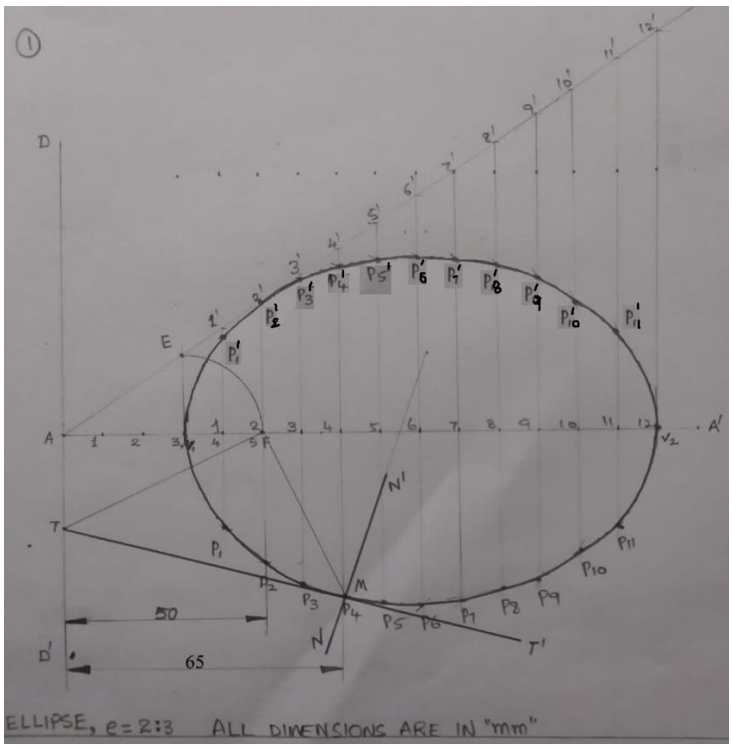

2. Draw a hyperbola with the distance of the focus from the directrix = 50mm and e=3/2. Also, draw a tangent and a normal to the curve at a point 45 mm from the directrix.

   Solution :

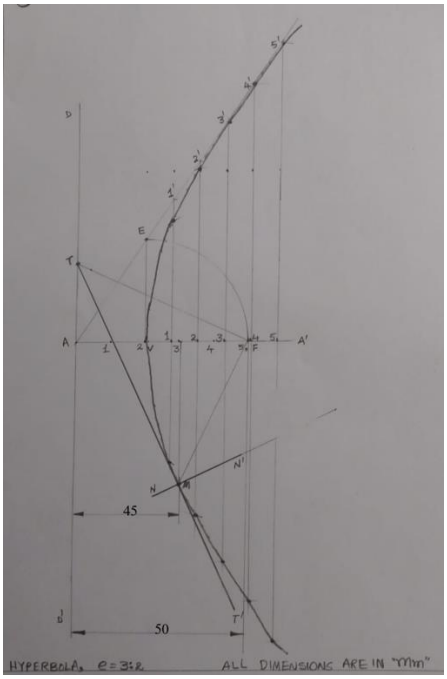

3. Draw a parabola with the distance of the focus from the directrix is 60 mm. Also, draw a tangent and a normal to the parabola at a point on the curve.
   Solution:

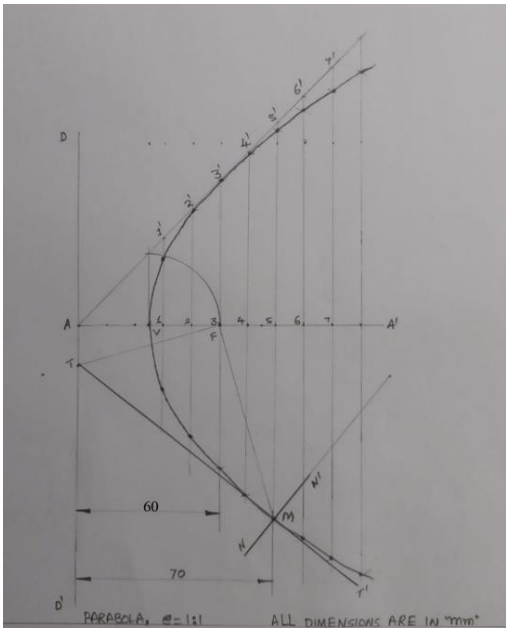

4. Draw an involute of a pentagonal plane of given side 25 mm
   Solution:

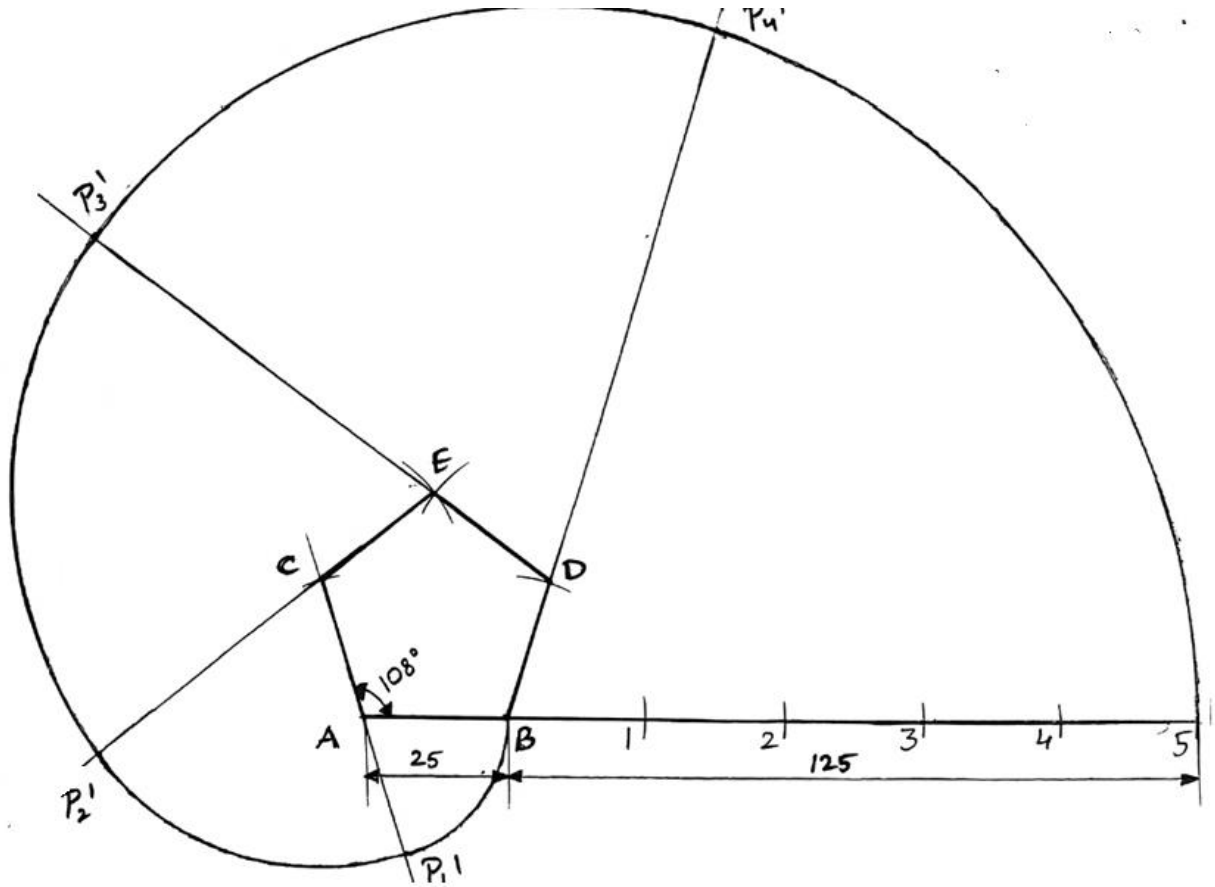

5. Draw Hexagonal Involute of given side 25 mm
   Solution:

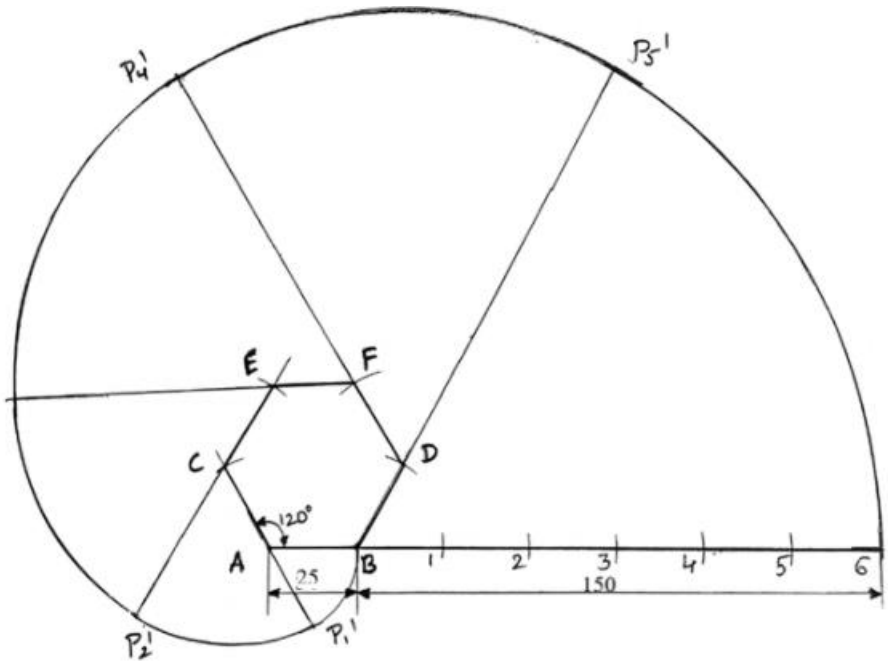

6. Draw a square involute of a given side 30 mm
   Solution :

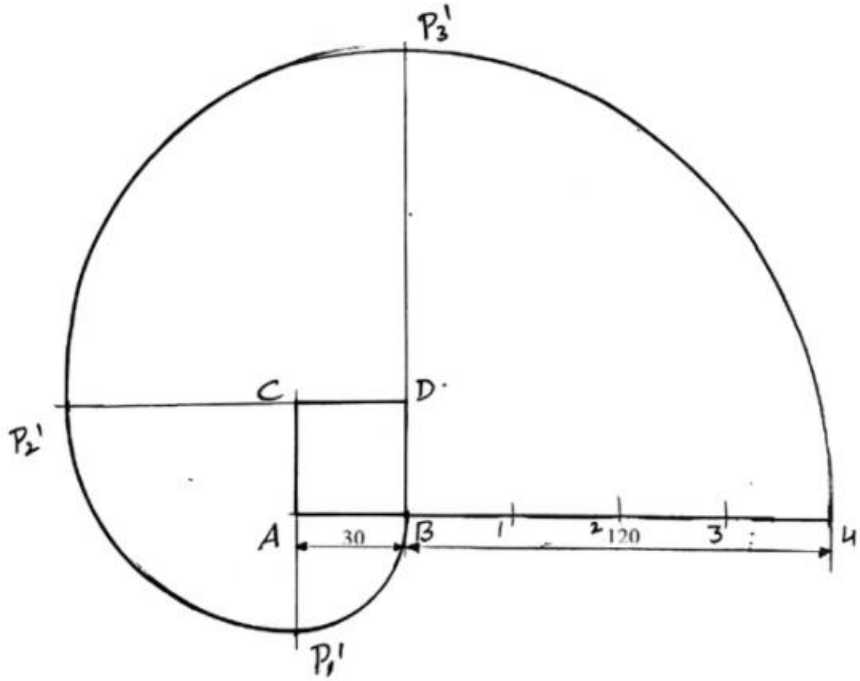

Module-III
Short Questions

1. What is an orthographic projection? Name the two principal planes used in orthographic projection

Solution:

The orthographic projection is a parallel projection in which the projectors are parallel to each other and perpendicular to the plane of projection

The term orthographic is derived from the word 'orthos' which means perpendicular

2. In which quadrant is a point located if both the Front view and Top view are above XY line with example?

Solution:

The Quadrant in which both the Front view and Top view are above XY is Second Quadrant

For Example:

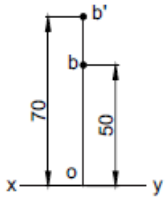

3. In which quadrant is a point located if it is below HP and in front of VP with example?

Solution:

Third Quadrant

For example:

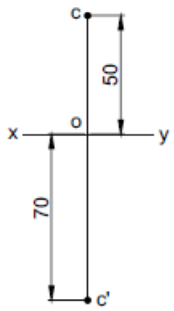

4. A line AB of length 60mm is parallel to VP and Perpendicular to HP and one end of the line is 20mm above the HP and 15mm infront of VP .Draw its projections
   Solution:

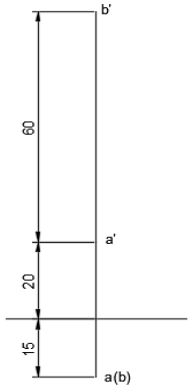

5. Draw the projections of a line AB 70mm when it is parallel to both HP and VP and is 20 mm above the HP and 30mm infront of VP.
   Solution :

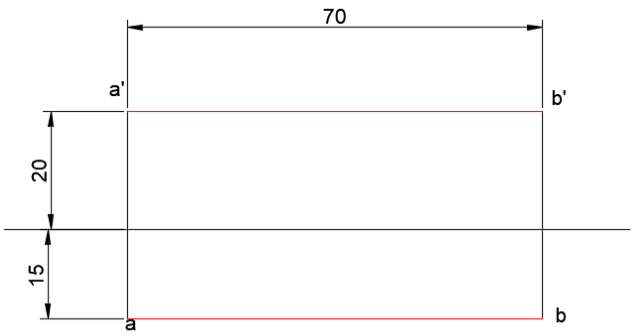

6. How is the true inclination with VP denoted and where is it seen?
   Solution:
   The true inclination with VP is in Top View and is denoted by Φ

Long Questions

1. a) Draw the projections of a point A located 30 mm above HP and 25 mm in front of VP
   b) Draw projections of a point B 25 mm below HP and 20 mm behind VP.
   Solution :

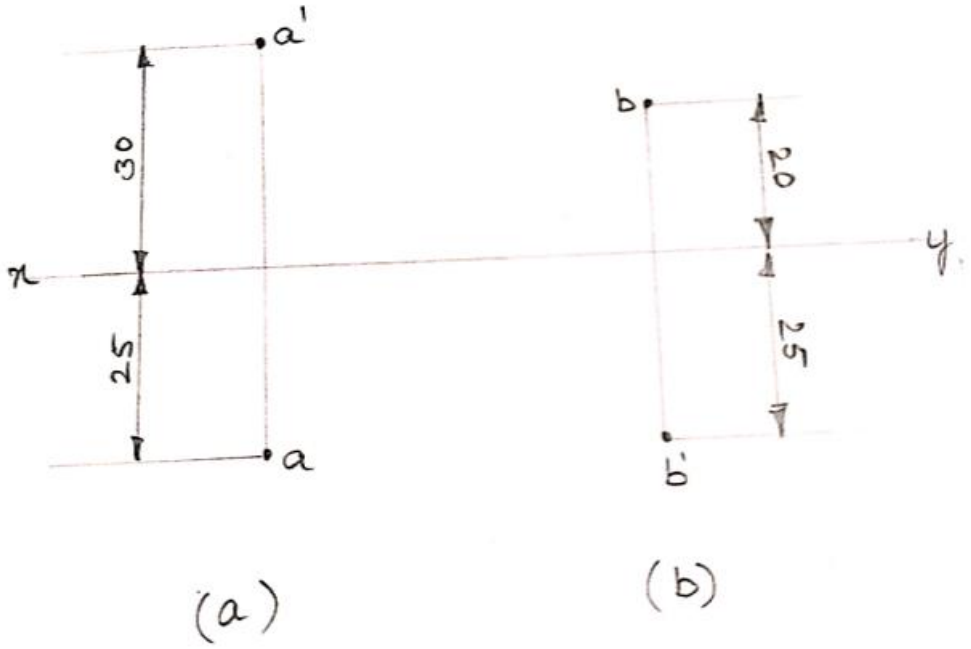

2. a) Draw the projections of a point X located 30 mm below HP and 20 mm in front of VP
   b) Draw projections of a point Y 25 mm above HP and 35 mm behind VP.
   Solution:

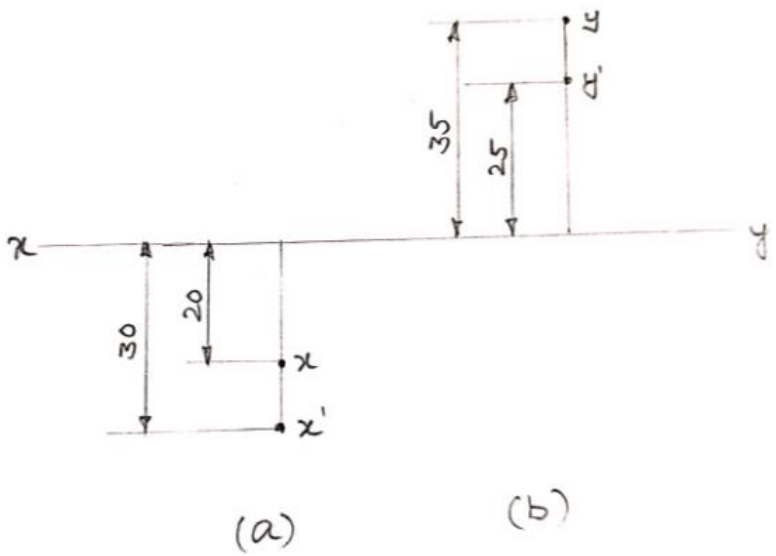

3. Name the position of a point if it is situated in I, II, III & IV quadrants.
   Solution :

- **HP (Horizontal Plane):** Represents top view.
- **VP (Vertical Plane):** Represents front view.
- **Quadrant I:** Above HP, in front of VP (most commonly used for projections).
- **Quadrant II:** Above HP, behind VP.

- **Quadrant III:** Below HP, behind VP.
- **Quadrant IV:** Below HP, in front of VP.

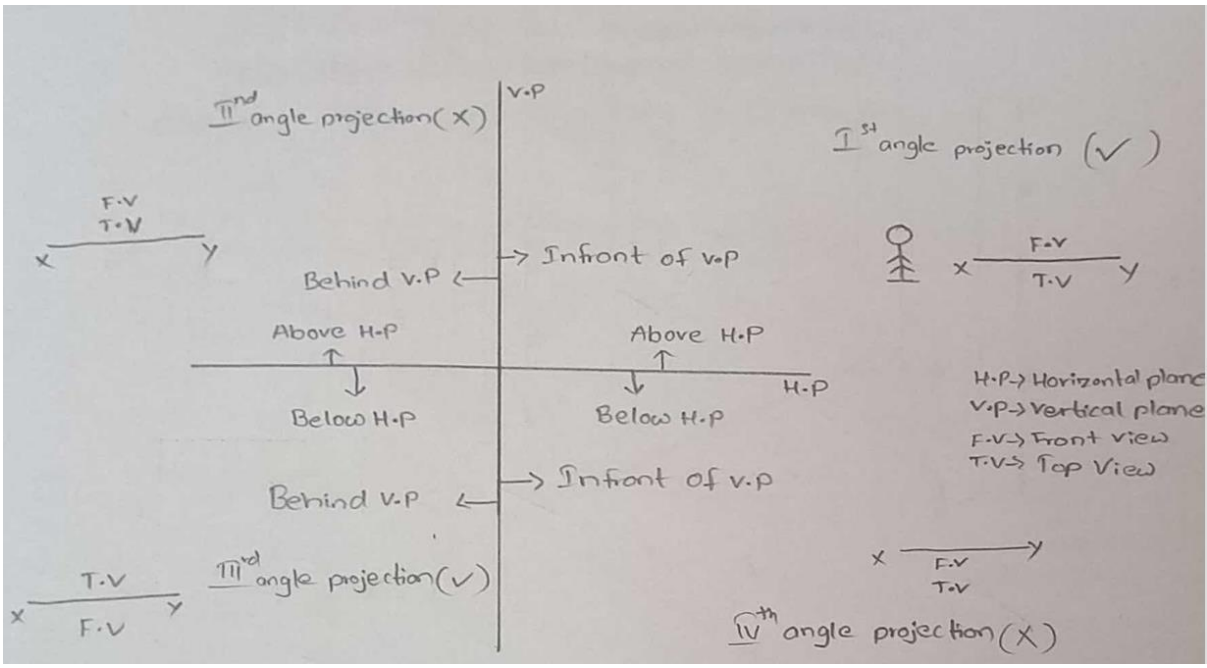

4. A 60 mm long line CD has its end C 25 mm above the H.P. and 30 mm in front of the V.P. The line is inclined at 50° to the H.P. and 30° to the V.P. Draw its projections
   Solution:

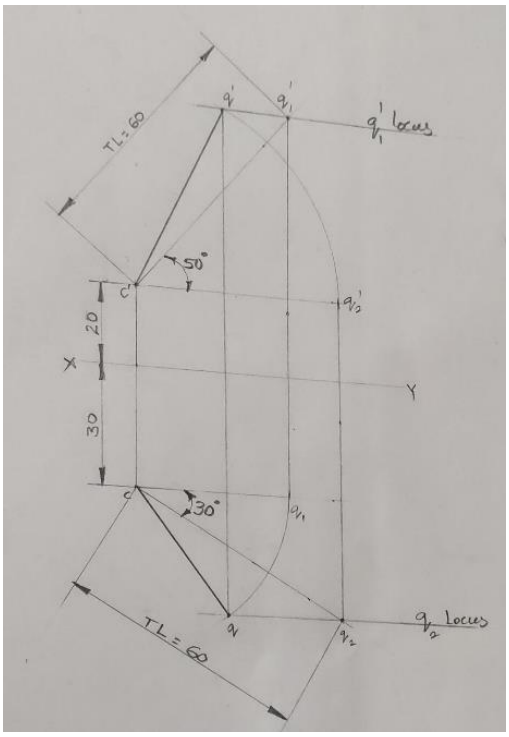

5. A 55 mm long line MN has its end M 25 mm above the H.P. and 20 mm in front of the V.P. The line is inclined at 40° to the H.P. and 60° to the V.P. draw its projections.
   Solution :

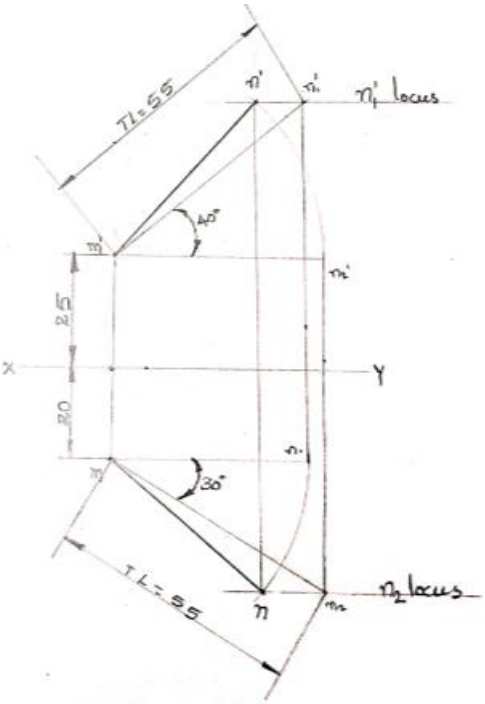

6. A 70 mm long line RS, has its end R 35 mm above the H.P. and 25 mm in front of the V.P. The line is inclined at 45° to the H.P. and 35° to the V.P. Draw its projections

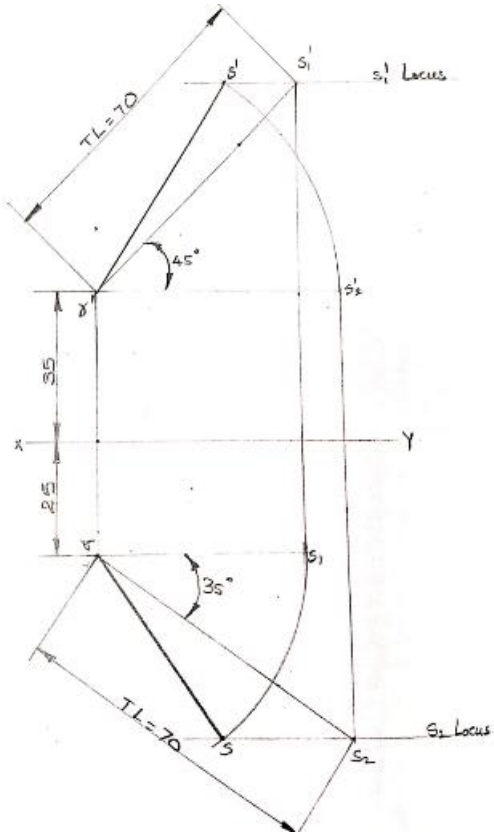

Module-IV

<u>Short Questions</u>

1. What is a plane in engineering graphics.
   Solution:

Objects with 2 Dimensions which has length, breadth and negligible thickness are called planes.

2. Draw the projections of a pentagonal plane of side 30mm when it is parallel to VP and Perpendicular to HP.
   Solution

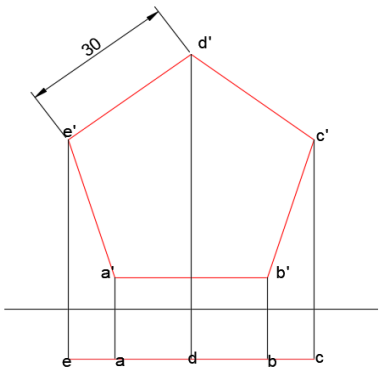

3. Which view shows the true shape of a plane when it is parallel to HP and perpendicular to VP?
   Solution:
   Since the Plane is parallel to HP , in the TopView True shape of the plane is seen.
4. Define a solid in engineering graphics?
   Solution:
   Objects with 3 Dimensions which has length, breadth and thickness are called solids .

5. In projection of solids, when an axis is perpendicular to HP and Parallel to VP in which view we can see the true shape of the base.
   Solution:
   In Projection of Solids when the axis is perpendicular to HP and parallel to VP , the true shape of the base is seen in HP ie in the Top View
6. When an axis is inclined to VP and parallel to HP the inclination is seen in which view?
   Solution:
   When the axis is inclined to VP and parallel to HP the inclination is seen in Top View

Long Questions

1. A rhombus of diagonals 70 mm and 45 mm is placed on an end of the major diagonal on the H.P. Its surface is inclined at 50° to the H.P. and perpendicular to the V.P. Draw its projections.
   Solution :

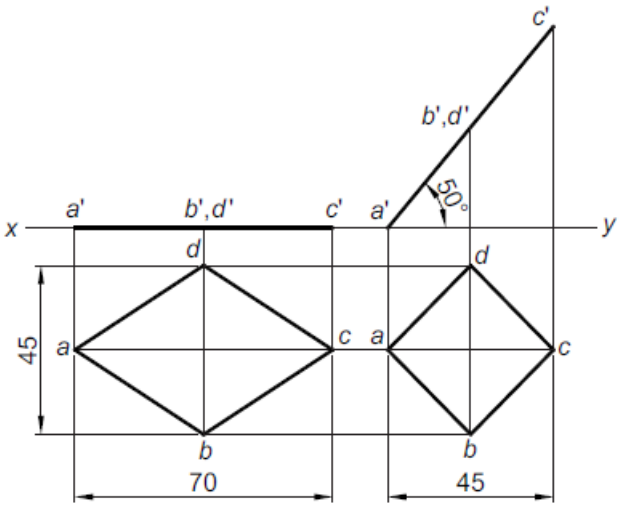

2. An isosceles triangle of base 40 mm and altitude 54 mm has its base in the V.P. The surface of the plane is inclined at 50° to the V.P. and perpendicular to the H.P. Draw its projections.
Solution :

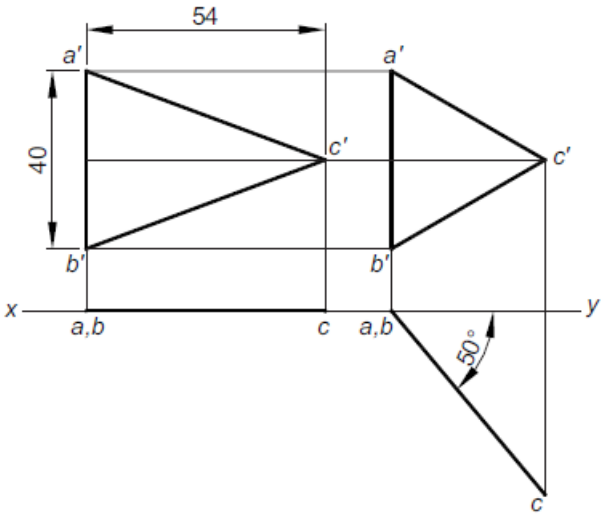

3. A hexagonal plane of side 30 mm has a corner in the V.P. The surface of the plane is inclined at 45° to the V.P. and perpendicular to the H.P. Draw its projections. Assume that the diagonal through the corner in the V.P. is parallel to the H.P
Solution :

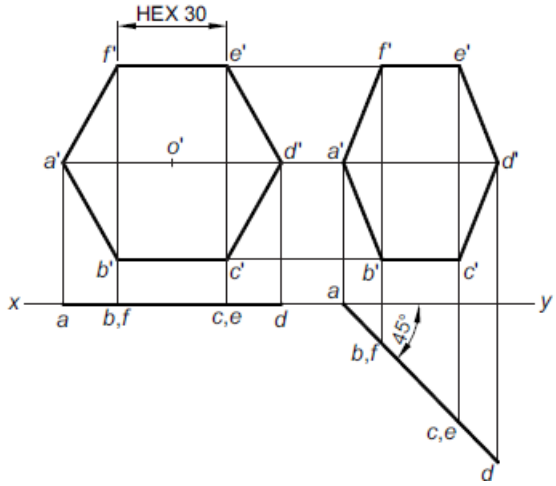

4. A square prism of base side 40 mm and axis 60 mm is resting on its base on the ground. Draw its projections when (a) a face is perpendicular to the V.P., (b) a face is inclined at 30° to the V.P.
   Solution :

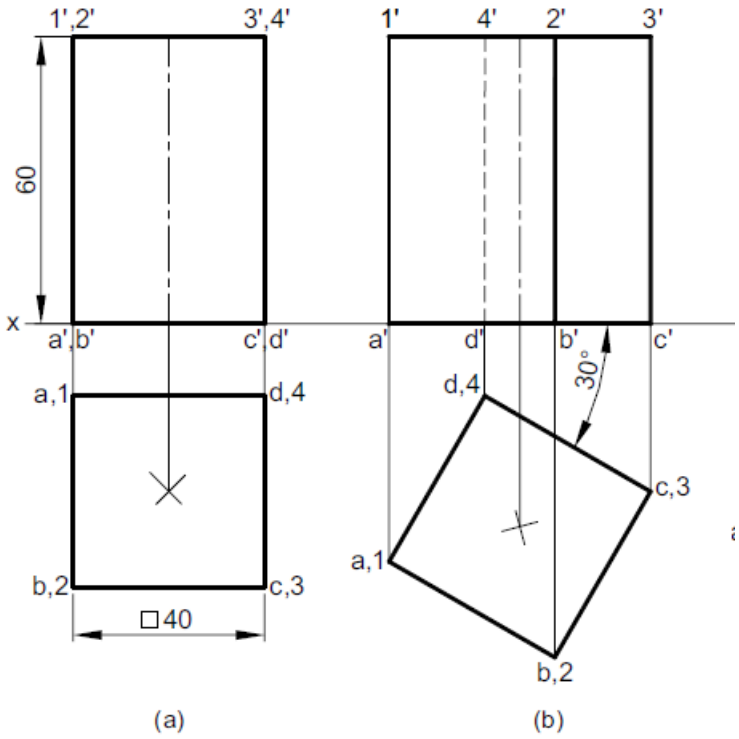

5. Draw the projections of a square pyramid of base side 40 mm and axis 60 mm has a corner of its base in the V.P. A slant edge contained by that corner is inclined at 45° to the V.P.
   Solution :

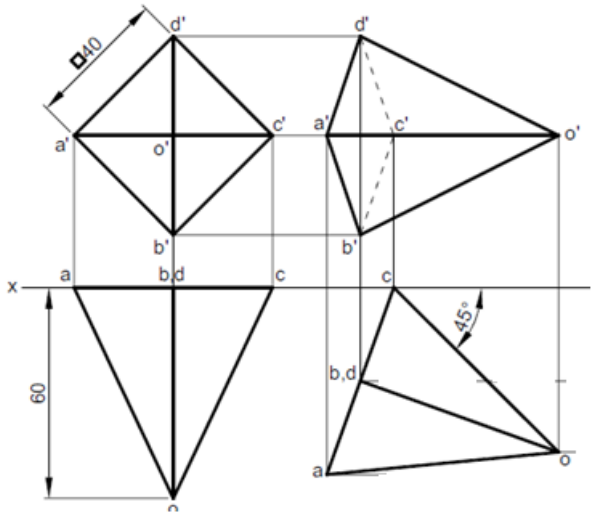

6. A pentagonal prism of base edge 30 mm and axis 60 mm rests on an edge of its base in the H.P. Its axis is parallel to V.P. and inclined at 45° to the H.P. Draw its projections.
   Solution :

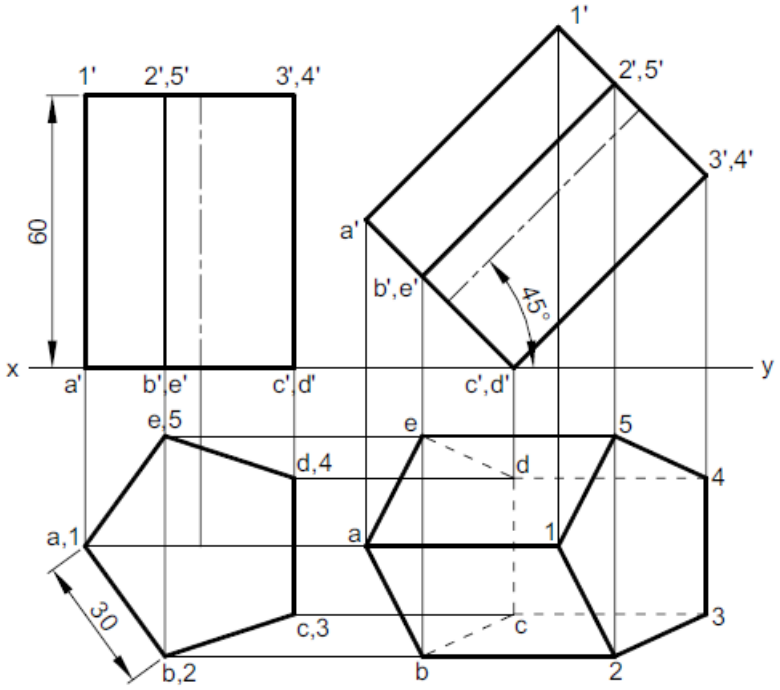

Module- V
Short Questions

1. Define an isometric view?
   Solution:
   Isometric view is a type of pictorial projection in which the three dimensions of a solid are not only shown in one view, but their actual sizes can be measured directly from it.

2. What is an isometric axis?
   Solution:
   The term "isometric" means "equal measure,"
   The three principal axes (X, Y, and Z) are equally inclined at 120-degree angles to one another
3. Draw an isometric view of a Rectangle of size 60X30mm.
   Solution:

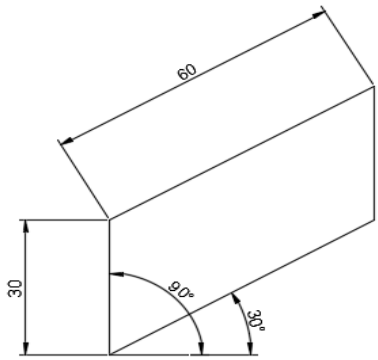

4. Draw an isometric view of a circle of radius 25mm?
   Solution:

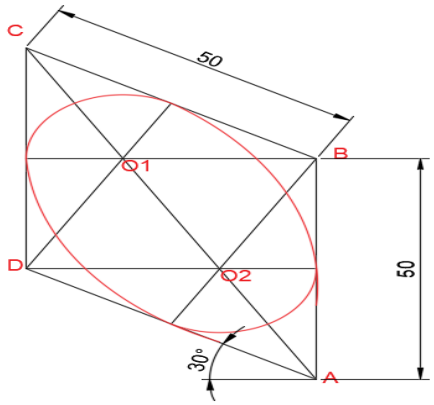

5. What angle do isometric axes make with each other?
   Solution:
   Isometric Axis makes an angle of 120^0 with each axis.

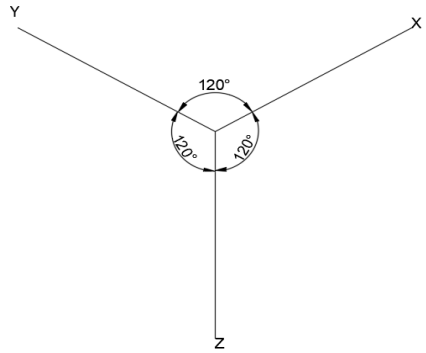

6. What is the difference between orthographic projections and isometric projection?
   Solution:

	Orthographic projection	Isometric Projection
1	The orthographic projection is a parallel projection in which the projectors are parallel to each other and perpendicular to the plane of projection	Isometric projection is a type of pictorial projection in which the three dimensions of a solid are not only shown in one view, but their actual sizes can be measured directly from it
2.	The term orthographic is derived from the word ‘orthos’ which means perpendicular	The term "isometric" means "equal measure”.

Long Questions

1. Draw the isometric view of a hexagonal prism, with side of base 20 mm and length of axis 60 mm, when its axis is vertical.

Solution:

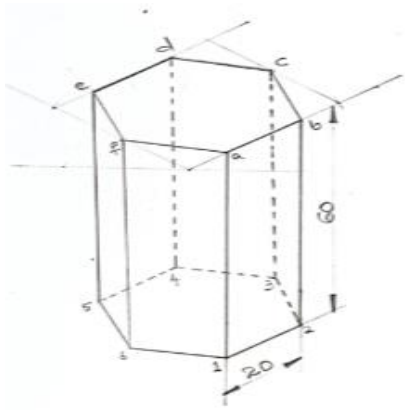

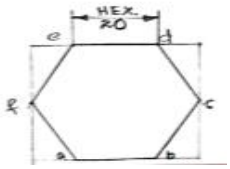

2. A pentagonal pyramid of side 30 mm, axis 60 mm is placed on HP. Draw the isometric projection of solid when its axis is horizontal.

Solution:

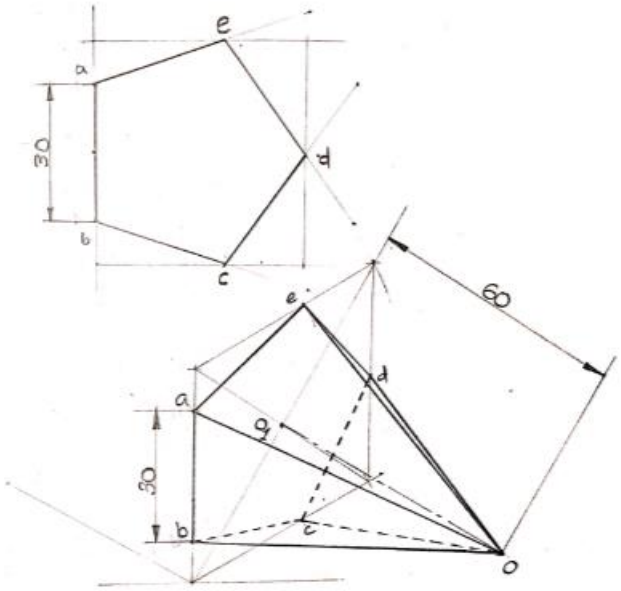

3. Draw the isometric view of a cone of diameter 50 mm and axis 70 mm long.
Solution :

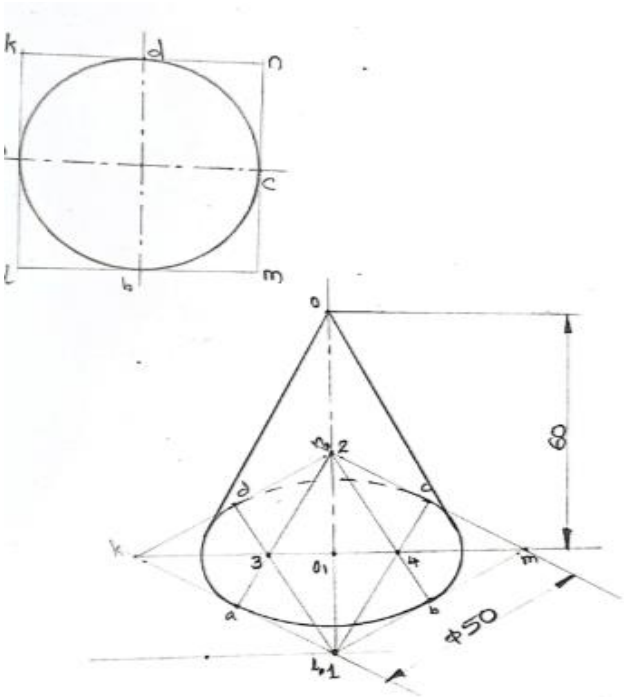

4. Draw Front view, Top view and Side view of the given isometric view given in figure.

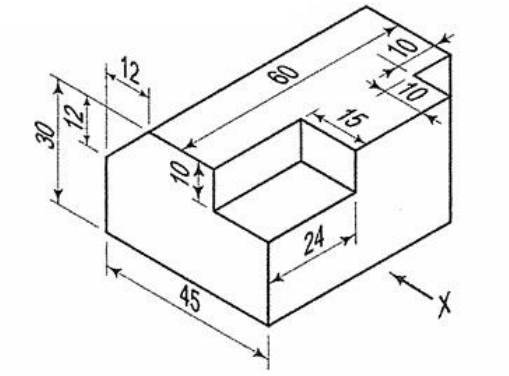

Solution :

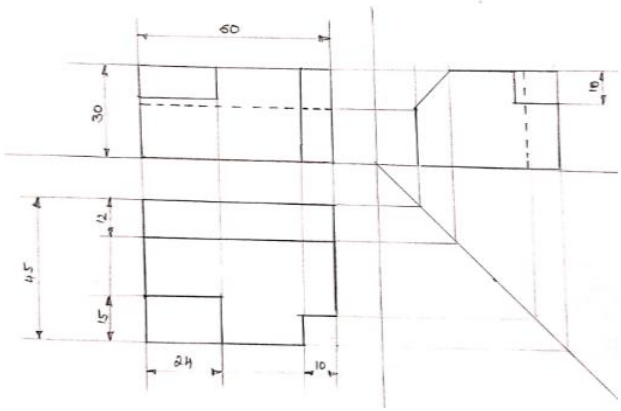

5. Draw the front view, top view and left side views of for the figure given below

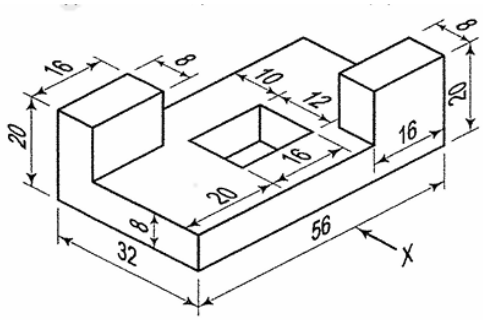

Solution:

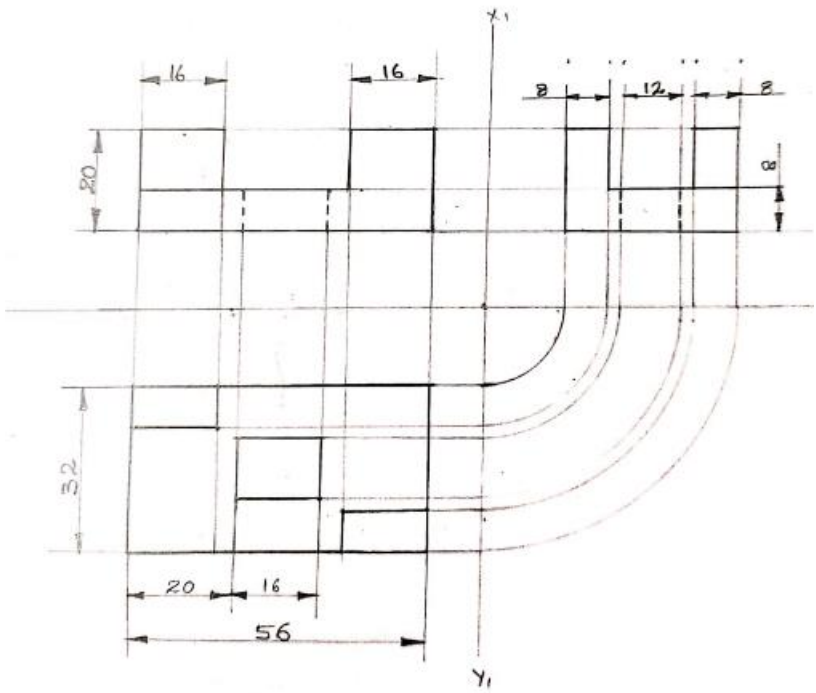

6. Draw Front view, Top view and Side view of the given isometric view given in figure.

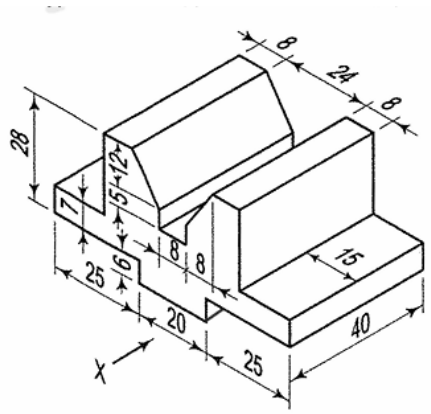

Solution:

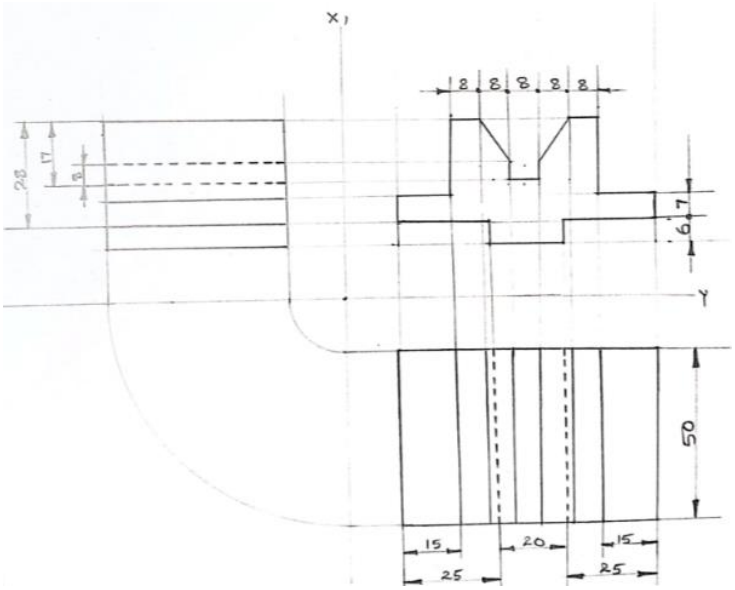
X
Y
8
8
8
8
8
7
6
50
15
20
15
25
25
28
17
8